Contents

1. Description 3
2. Features 3
3. Safety instruction 3
4. Technical data 4
5. Display and keys 5-6
6. Maximum pilotable power 6
7. Wiring diagram 7
8. Dimensions 7
9. Main menu 8
10. Initial operation 9
11. Astro time setting and dispaly 9-12
12.Time and date setting 15
13. Program setting 15-20
14. Operation modes setting 20-22
15. Options 22-23
16. Reset 24
17. Keys combination for MANUAL 24
18. Mode precedence 24

LCTEC

lcpoland.com

4.Technical data

Supply terminals	A1-A2
Rated voltage	AC/DC 24-264V
Rated frequency	50/60Hz, 0
Power consumption	2W
Supply volltage tolerance	±10%
Number of channels	2
Program	astronomical, weekly and annual
Mode of work	manual, automatic, holiday and random
Summer/winter time	off, automatic changeover
Time tolerance	=1s/day at 20°C
Power reserve	10 year
Data readout	LCD display, with back light
Number of contacts	2 C/O
Current of contacts	16A/250V AC1
Switching capacity	4000VA/AC，384W/DC
Mechanical life	10^6
Electrical life	10^5
Rated insulation voltage	250V
Protection degree	IP20
Pollution degree	3
Altitude	=2000m
Ambient temperature	-30°C~55°C
Permissable relative humidity	=50%(40°C,without condensation)
Storage temperature	-30°C~70°C
Wire size	$1mm^2$ ~ $4mm^2$
Tightening torque	0.5Nm
Mounting	TH-35 Rail(EN60715)
Dimensions	90*36*65mm
Standard	IEC60730-1/IEC60730-2-7

5.Display and keys

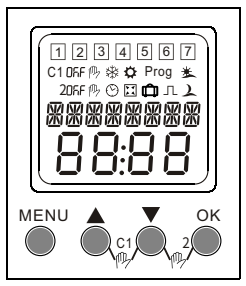

Symbol legend

1 2 3 4 5 6 7 — Days of the week Monday, Tuesday, ...Sunday

C1 — Channel 1

2 — Channel 2

On OFF — Relay status

— Automatic mode

— Manual mode

— Holiday mode

— Random mode

— Sunrise

— Sunset

— Winter time

— Summer time

Prog — Program setting

Backlighted display

After the external power supply is applied and then press any of four keys, the backlighted display will be illuminated. Otherwise, only symbols are displayed on the screen.

MENU	OK ◦ Confirm selection
▲ ◦ Select menu ◦ Increase a numerical value	▼ ◦ Select menu ◦ Decrease a numerical value
▲ ▼ C1 ◦ C1 manual operation	▼ OK C2 ◦ C2 manual operation

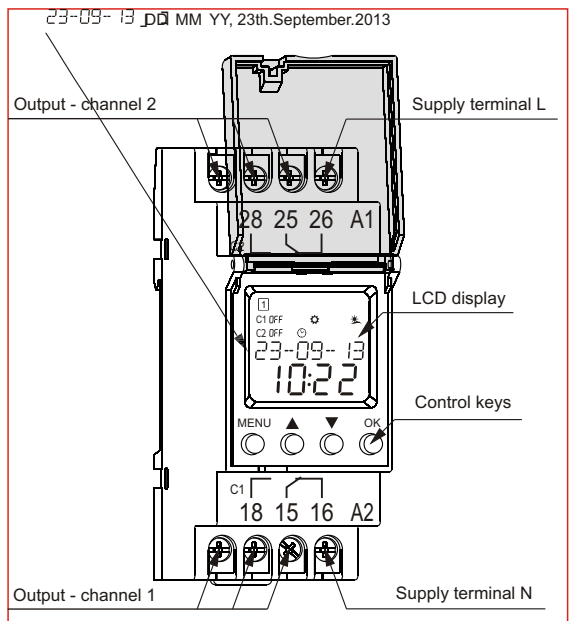

6.Maximum pilotable power

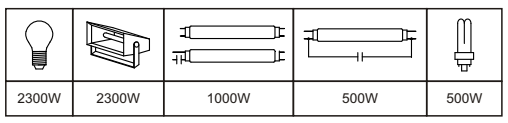

2300W	2300W	1000W	500W	500W

9. Main menu

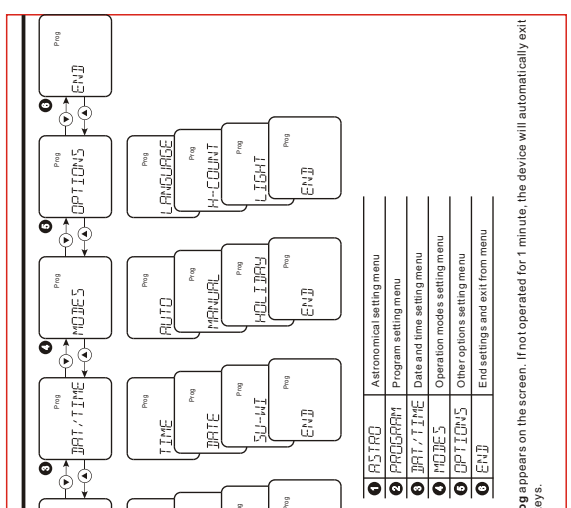

1	ASTRO	Astronomical setting menu
2	PROGRAM	Program setting menu
3	DAT/TIME	Date and time setting menu
4	MODES	Operation modes setting menu
5	OPTIONS	Other options setting menu
6	END	End settings and exit from menu

Press **MENU** key to enter menus setting, and symbol **Prog** appears on the screen. If not operated for 1 minute, the device will automatically exit from setting. Select the desired menu by pressing "▲▼" keys.

10. Initial operation

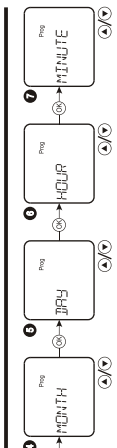

1. Press "MENU" key, the screen will display the mode for 2 seconds.
2. Select the desired language with "▲▼" keys and press "OK" key.
3. Select adequate year with "▲▼" keys and press "OK" key.
4. Select adequate month with "▲▼" keys and press "OK" key.
5. Select adequate day with "▲▼" keys and press "OK" key.
6. Select adequate hour with "▲▼" keys and press " OK" key.
7. Select the minute with "▲▼" keys and press " OK" key.

Note: If the settings were not ended and not operated by keys for 2 minutes, device will return to ENGLISH menu, and backlight is switched off. Pressing any keys can switch on display and backlight.

11. Astro time setting and display

● Check the astro time (sunrise/sunset)

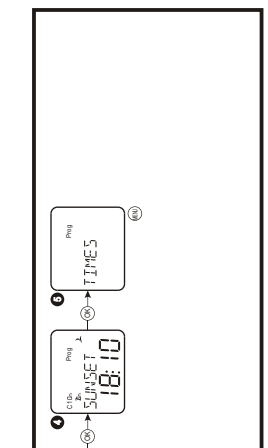

1. Select **ASTRO** and press "OK" key.
2. Select **TIMES** and press "OK" key.
3. Displaying the sunrise time.
4. Displaying the sunset time.
5. Exit from the setting by pressing" MENU" key.

● Check astro times on the required day

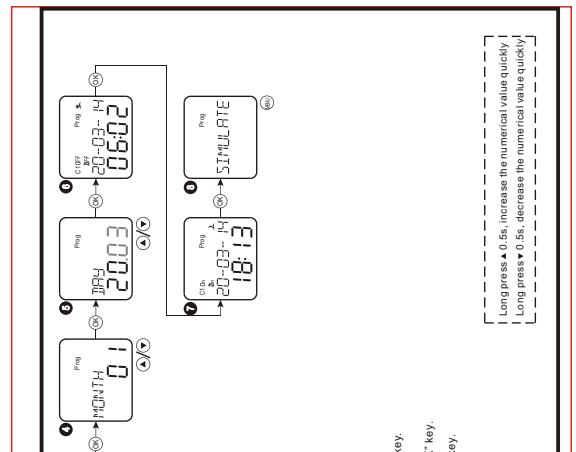

1. Select **ASTRO** and press "OK" key.
2. Select **SIMULATE** and press"OK" key.
3. Select the required year with"▲▼" keys and then press "OK" key. Year setting range is 2000~2095.
4. Select the required month with "▲▼" keys and then press "OK" key.
5. Select the required day with "▲▼" keys and then press "OK" key.
6. Displaying the sunrise time.
7. Displaying the sunset time.
8. Exit from the setting by pressing" MENU" key.

Long press▲0.5s, increase the numerical value quickly

Long press▼0.5s, decrease the numerical value quickly

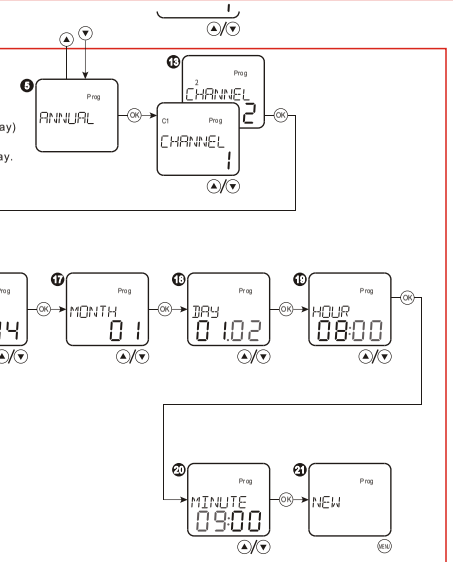

8 15 Display the output state of channel 2. Choose "ON" or "OFF" with "▲▼" keys and then press "OK" key.
9 10 Set the hour with "▲▼" keys and then press "OK" key.
10 20 Set the minute with "▲▼" keys and then press "OK" key.
11 Set the program activity on a week day(from Monday to Sunday) with " ▲▼" keys.
If YES is selected, program operation is enabled for flashing day.
If NO is selected, program is not used for flashing day.

12 21 Exit from the setting by pressing "MENU" key.
16 Set the year with "▲▼" keys and then press "OK" key.
17 Set the month with "▲▼" keys and then press "OK" key.
18 Set the day with "▲▼" keys and then press "OK" key.

Long press ▲ 0.5s, increase the numerical value quickly
Long press ▼ 0.5s, decrease the numerical value quickly

Modify a program

1 Select **PROGRAM** and press "OK" key.
2 Select **REVIEW** and press "OK" key.
3 Select the desired program with "▲▼" and press "OK" key.
4 Display the content of the selected program. Selected the contents of different program number with "▲▼" and press "OK" key.
5 Select **WEEKLY** with "▲▼" and press "OK" key.
6 Select **ANNUAL** with "▲▼" and press "OK key.
7 14 Select **CHANNEL 1** or **CHANNEL 2** with "▲▼" and press "OK" key.
8 15 Display the output state of channel 1. Choose "ON" or "OFF" with "▲▼" keys and then press "OK" key.

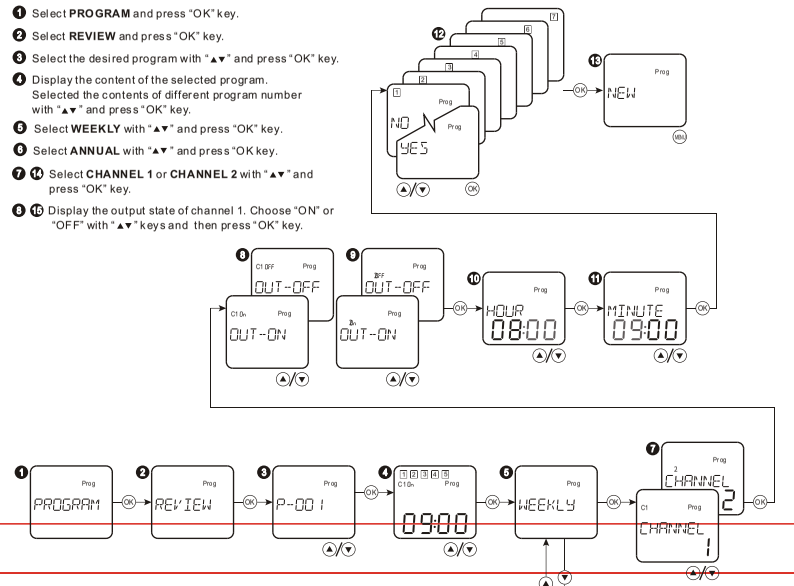

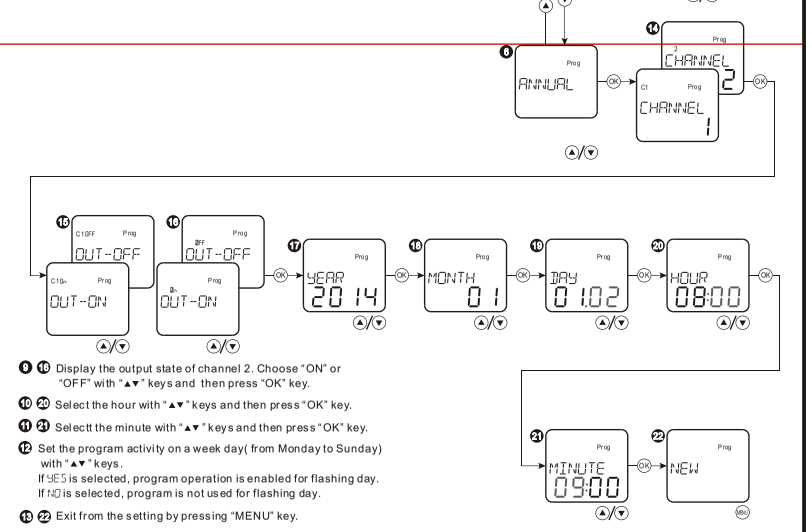

9 16 Display the output state of channel 2. Choose "ON" or "OFF" with "▲▼" keys and then press "OK" key.
10 20 Select the hour with "▲▼" keys and then press "OK" key.
11 21 Selectt the minute with "▲▼" keys and then press "OK" key.
12 Set the program activity on a week day(from Monday to Sunday) with "▲▼" keys.
If YES is selected, program operation is enabled for flashing day.
If NO is selected, program is not used for flashing day.
13 22 Exit from the setting by pressing "MENU" key.
17 Select the year with "▲▼" keys and then press "OK" key.
18 Select the month with "▲▼" keys and then press "OK" key.
19 Select the day with "▲▼" keys and then press "OK" key.

Long press ▲ 0.5s, increase the numerical value quickly
Long press ▼ 0.5s, decrease the numerical value quickly

Delete a program

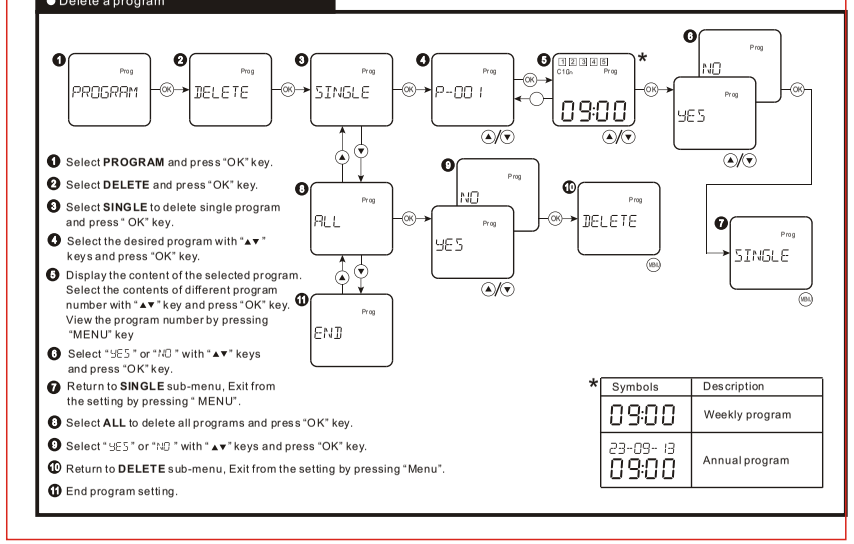

1 Select **PROGRAM** and press "OK" key.
2 Select **DELETE** and press "OK" key.
3 Select **SINGLE** to delete single program and press " OK" key.
4 Select the desired program with "▲▼" keys and press "OK" key.
5 Display the content of the selected program. Select the contents of different program number with "▲▼" key and press "OK" key. View the program number by pressing "MENU" key
6 Select "YES" or "NO" with "▲▼" keys and press "OK" key.
7 Return to **SINGLE** sub-menu, Exit from the setting by pressing " MENU".
8 Select **ALL** to delete all programs and press "OK" key.
9 Select "YES" or "NO" with "▲▼" keys and press "OK" key.
10 Return to **DELETE** sub-menu, Exit from the setting by pressing "Menu".
11 End program setting.

* Symbols	Description
09:00	Weekly program
23-09-13 09:00	Annual program

Check a program

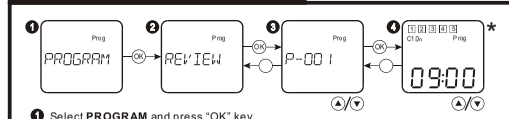

1 Select **PROGRAM** and press "OK" key.
2 Select **REVIEW** and press "OK" key.
3 Select the program number and press "OK" key. Return to **REVIEW** sub-menu by pressing "MENU" key
4 Display the operation states of the selected program. View the contents of different program number with "▲▼" keys and press "OK" key. View the program number by pressing "MENU" key

* Symbols	Description
09:00	Weekly program
23-09-13 09:00	Annual program

14. Operation modes setting

Auto mode

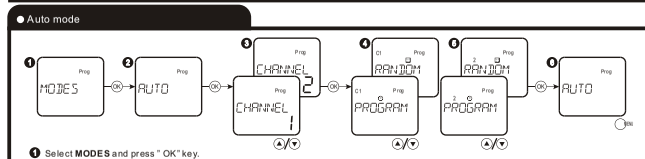

1 Select **MODES** and press " OK" key.
2 Select **AUTO** submenu and press " OK" key.
3 Select **CHANNEL 1** or **CHANNEL 2** with "▲▼" and press "OK" key.
4 Select **AUTO** or **RANDOM** modes for channel 1 with "▲▼" and press "OK" key.The random on and off times range is 1mins-30mins.
5 Select **AUTO** or **RANDOM** modes for channel 2 with "▲▼" and press "OK" key.The random on and off times range is 1mins-30mins.
6 Exit from the setting by pressing "MENU" key.

Symbols	Function
PROGRAM	Auto mode
RANDOM	Random mode

12. Time and date setting

Time setting

1 Select **DAT/TIME** and press "OK" key.
2 Select **TIME** and press "OK" key.
3 Choose adequate hour with"▲▼" keys and press "OK" key. adjusting range is 0~23.
4 Choose adequate minute with"▲▼" keys and press"OK" key. adjusting range is 0~59.
5 Exit from the setting by pressing"MENU" key.

Long press ▲ 0.5s, increase the numerical value quickly
Long press ▼ 0.5s, decrease the numerical value quickly

Date setting

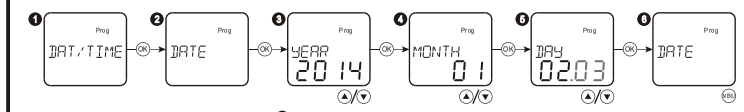

1 Select **DAT/TIME** and press "OK" key.
2 Select **DATE** and press "OK" key.
3 Choose adequate year with"▲▼" keys and press"OK" key. adjusting range is 2000~2095.
4 Choose adequate month with"▲▼" keys and press"OK" key.
5 Choose adequate day with"▲▼" keys and press"OK" key.
6 Exit from the setting by pressing"MENU" key.

Long press ▲ 0.5s, increase the numerical value quickly
Long press ▼ 0.5s, decrease the numerical value quickly

Summer/winter time setting

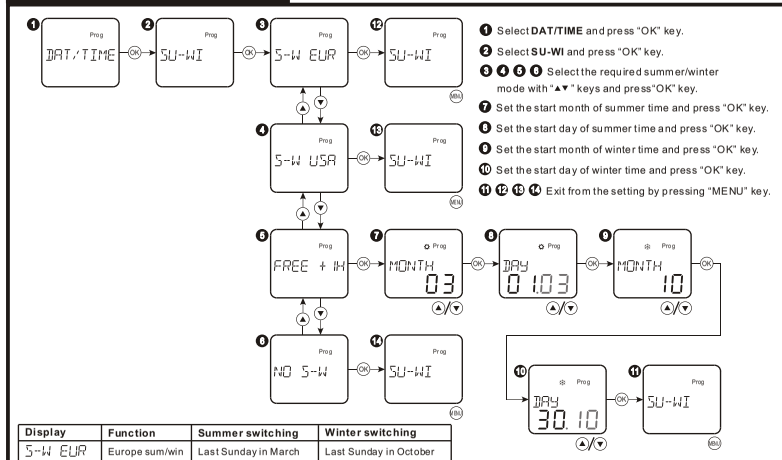

1 Select **DAT/TIME** and press "OK" key.
2 Select **SU-WI** and press "OK" key.
3 4 5 6 Select the required summer/winter mode with "▲▼" keys and press"OK" key.
7 Set the start month of summer time and press "OK" key.
8 Set the start day of summer time and press "OK" key.
9 Set the start month of winter time and press "OK" key.
10 Set the start day of winter time and press "OK" key.
11 12 13 14 Exit from the setting by pressing "MENU" key.

Display	Function	Summer switching	Winter switching
S-W EUR	Europe sum/win	Last Sunday in March	Last Sunday in October
S-W USA	U.S.A sum/win	Second Sunday in March	First Sunday in November
FREE + IH	Free sum/win	Freely programmed	Freely programmed
NO S-W	No sum/win	None	None

Holiday mode

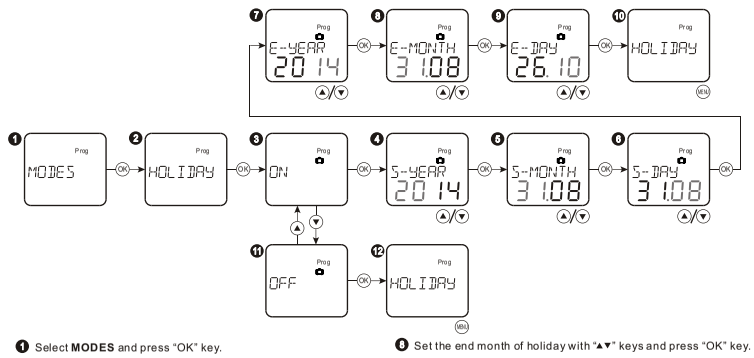

1 Select **MODES** and press "OK" key.
2 Select **HOLIDAY** and press "OK" key.
3 Select **ON** activate holiday mode and press "OK" key.
4 Set the start year of holiday with "▲▼" keys and press "OK" key.
5 Set the start month of holiday with "▲▼" keys and press "OK" key.
6 Set the start day of holiday with "▲▼" keys and press "OK" key.
7 Set the end year of holiday with "▲▼" keys and press "OK" key.
8 Set the end month of holiday with "▲▼" keys and press "OK" key.
9 Set the end day of holiday with "▲▼" keys and press "OK" key.
10 Return to **HOLIDAY** menu. Exit from the setting by pressing "MENU" key.
11 Select **OFF** to deactivate holiday mode and press "OK" key.
12 Return to **HOLIDAY** menu. Exit from the setting by pressing "MENU" key.

Long press ▲ 0.5s, increase the numerical value quickly
Long press ▼ 0.5s, decrease the numerical value quickly

13. Program setting

Create a program

1 Select **PROGRAM** and press "OK" key.
2 Select **NEW** and press "OK" key.
3 Display new program number and press "OK" key. When the programs memory is full, new program will not be created, symbol "FULL" appears on the screen.
4 Select **WEEKLY** with "▲▼" and press "OK" key.
5 Select **ANNUAL** with "▲▼" and press "OK" key.
6 13 Select **CHANNEL 1** or **CHANNEL 2** with "▲▼" and press "OK" key.
7 14 Display the output state of channel 1. Choose "ON" or "OFF" with "▲▼" keys and then press "OK" key.

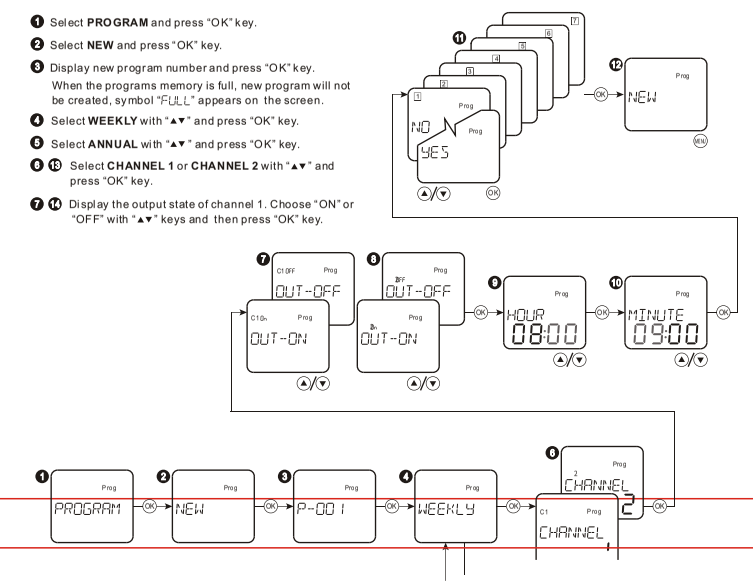

1. Description

DTS-2CH-240-SW astronomical digital time switch is for realization of time functions in the systems of automatics and steering. Night break program can be use to turn off the output at night, set the offset times and operation time of sunrise and sunset. There is an internal battery which can protect real time clock and all the settings when the electric power supply is off.

2.Features

- Astronomical time switch
- Astro and annual program
- 10 year power reserve(lithium battery
- 80 programs
- Sealable cover of the front panel, easy setting by 4 keys.
- Automatic summer/winter time changeover
- Back-lighted LCD display(can be turned off)
- Holiday mode.
- Random mode
- 2 channels (each channel can be assigned an individual program)
- Automatic transfer of weekdays
- 24-264V AC/DC input supply.
- Double-module, mounted on TH-35 rail.

3.Safety instructions

3.1. The device must be installed by a qualified person.
3.2. Disconnect all power before working on the device. Don't touch any terminal when the power is ON.
3.3. Verify correct terminal connection when wiring.
3.4. Don't dismantle or repair the device whether it works normally, otherwise no responsibility is assumed by producer or seller.
3.5. Never use the device at the site which can be invaded by corrode gas, strong sunshine light and rain.
3.6. Clean the device with a dry cloth.
3.7. Fail to follow these instructions will result in serious injury or death.

7. Wiring diagram

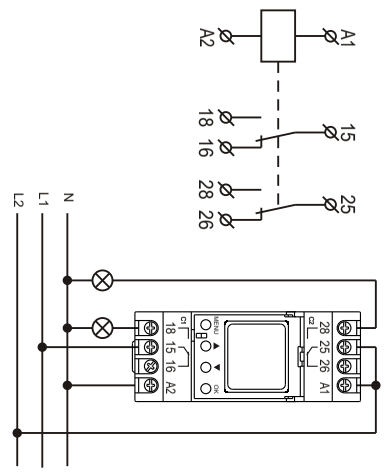

8. Dimensions

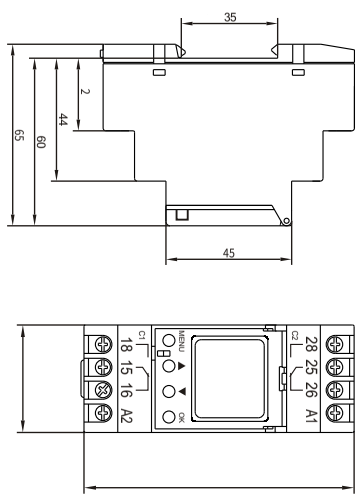

● Set offset time

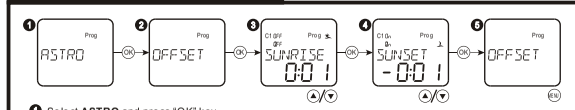

1. Select **ASTRO** and press "OK" key.
2. Select **OFFSET** and press "OK" key.
3. Select the offset time of sunrise with "▲▼" keys and press"OK" key. Offset range is ±2h.
4. Select the offset time of sunset with "▲▼"keys and press"OK" key. Offset range is ±2h.
5. Exit from the setting by pressing "MENU" key.

Long press ▲ 0.5s, increase the numerical value quickly
Long press ▼ 0.5s, decrease the numerical value quickly

● Set astro operating mode

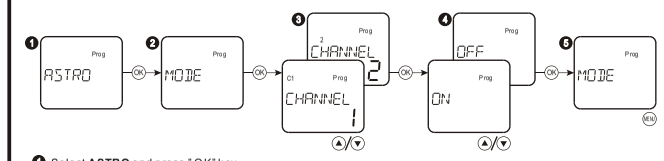

1. Select **ASTRO** and press " OK" key.
2. Select **MODE** and press " OK" key.
3. Select channel 1 or channel 2 with "▲▼" keys and then press "OK" key.
4. Select ON or OFF to activate or desactivate astro mode with "▲▼" keys and then press "OK" key.
5. Exit from the setting by pressing "MENU" key.

● Geographical location setting

1. Select **ASTRO** and press "OK" key.
2. Select **POSITION** and press "OK" key.
3. Select **LATITUDE** and press "OK" key.
4. Select **SOUTH** or **NORTH** and press "OK" key.
   SOUTH: south latitude, **NORTH**: north latitude
5. Set latitude degree value with "▲▼" and press "OK" key.
6. Set latitude minute value with "▲▼" and press "OK" key.
7. Exit from the latitude setting by pressing "MENU" key.
8. Select **LONGITUD** and press "OK" key.
9. Select **EAST** or **WEST**and press "OK" key.
   EAST: east longitude
   WEST: west longitude
10. Set longitude degree value with "▲▼" and press " OK" key.
11. Set longitude minute value with"▲▼" and press "OK" key.
12. Exit from the longitude setting by pressing "MENU" key.
13. Select **T-ZONE** to set time zone, press "OK" key.
14. Select required time zone with "▲▼", press "OK" key. Time zone is -12~+12.
15. Exit from the setting by pressing "MENU" key.
16. End the astro settings.

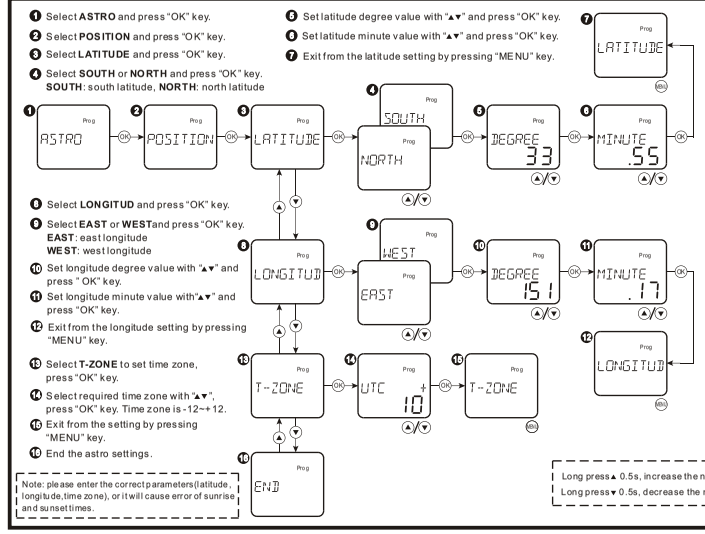

Note: please enter the correct parameters(latitude, longitude,time zone), or it will cause error of sunrise and sunset times.

Long press ▲ 0.5s, increase the numerical value quickly
Long press ▼ 0.5s, decrease the numerical value quickly

● Manual mode

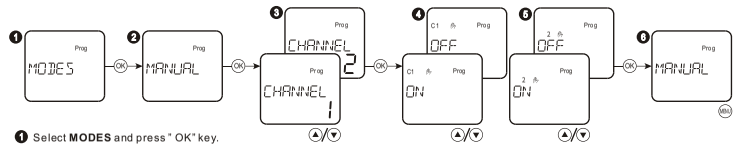

1. Select **MODES** and press " OK" key.
2. Select **MANUAL** submenu and press " OK" key.
3. Select **CHANNEL 1** or **CHANNEL 2** with "▲▼" and press "OK" key.
4. Display the output state of channel 1. Select "ON" or "OFF" with "▲▼" keys and then press "OK" key.
5. Display the output state of channel 2. Select "ON" or "OFF" with "▲▼" keys and then press "OK" key.
6. Exit from the setting by pressing" MENU" key.

15. Options

● Back-light

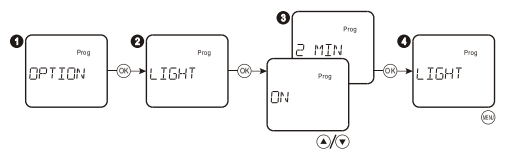

1. Select **OPTION** and press "OK" key.
2. Select **LIGHT** sub-menu and press "OK" key.
3. Select ON or 2 MIN with "▲▼" keys and press "OK" key.
4. Exit from the setting by pressing "MENU" key.

Display	Function
ON	Fixed ON for backlight
2 MIN	Switch off 2 minutes after last input.

● Hour counter

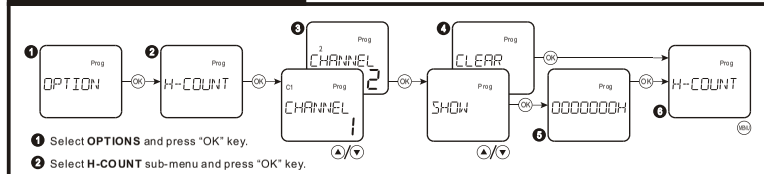

1. Select **OPTIONS** and press "OK" key.
2. Select **H-COUNT** sub-menu and press "OK" key.
3. Select **CHANNEL 1** or **CHANNEL 2** with "▲▼" and press "OK" key.
4. Select **SHOW** or **CLEAR** with "▲▼" keys and press "OK" key.
5. Display the operation time. The minimum time unit is hour. Exit by pressing"OK" key after viewing.
6. Exit from the setting by pressing "MENU" key.

16.Reset

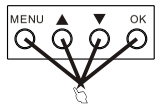

Press the four keys simultaneously for 3 seconds to reset automatically.
The data restored to factory settings.

17.Keys combination for MANUAL

○ AUTO/MANUAL

Press "▲▼" keys simultaneously for 0.5s, the output state of channel 1 switches to MANUAL.
When the output states of other operation modes was changed, Manual mode exits automatically.

Press "▼" and "OK"keys simultaneously for 0.5, the output state of channel 2 switches to MANUAL.
When the output states of other operation modes was changed, Manual mode exits automatically.

○ PERM ON/PERM OFF

Press "▲▼" keys simultaneously for 2s, the output state of channel 1 switches to PERM ON/PERM OFF.
flashes.
>2s

Press "▲▼" keys simultaneously for 2s, the output state of channel 2 switches to PERM ON/PERM OFF.
flashes.
>2s

AUTO	AUTO mode
MANUAL	MANUAL mode
PERM ON	PERMANENT ON mode
PERM OFF	PERMANENT ON mode

18.Mode precedence

Precedence	Display	Output modes
Highest ↑	On/OFF	Manual control
		Holiday mode
		Random mode
		Auto mode
Lowest	/	Astro mode